DRWG No
40-3034-22

THIRD ANGLE PROJECTION. DIMNS. IN MM

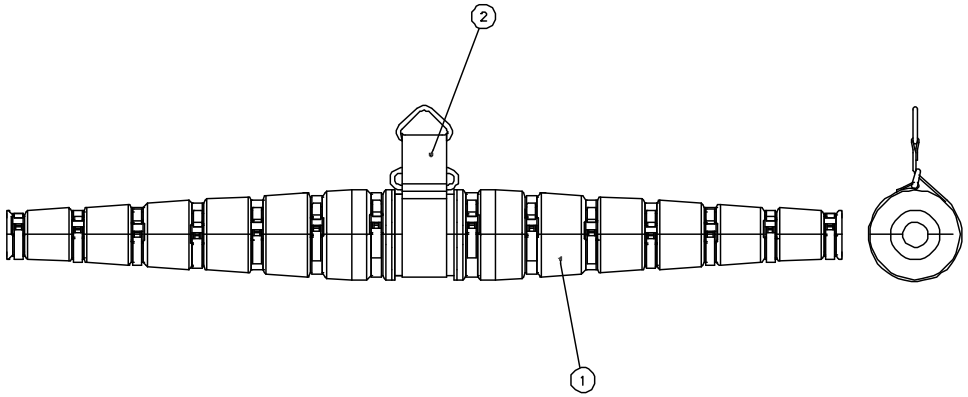

DATE 11Dec'01			
DRAWN fJJ			
SCALE NTS			
CHECKED	11Dec'01		1
	DATE	C.NOTE	ISS

CWA DESIGN COPYRIGHT
NOT TO BE USED OR RE-PRODUCED WITHOUT EXPRESS PERMISSION FROM CWA

TOLERANCES :- UNLESS OTHERWISE STATED
NO DEC PLACE ±0.5 ANGULAR ±½°
1 DEC PLACE ± 0.3 2 DEC PLACE ±0.15
HOLES UP TO 12.7mm +0.10mm -0
ALL COAXIAL DIAS CONCENTRIC WITHIN 0.05mm
ALL HOLES ON PITCH CIRCLES WITHIN D.10mm OF TRUE POS.

REMOVE ALL SHARP EDGES WITH 0.40 RAD OR CHAMFER UNLESS OTHERWISE STATED

MATERIAL

FINISH

DRWG No. 40-3034-22

SURFACE FINISH 0.8 UNLESS OTHERWISE STATED

CWA PRODUCTS LIMITED HOOK BASINGSTOKE HANTS

TITLE ø36 CABLE GRIP

DRWG No
30-3034-20

THIRD ANGLE PROJECTION. DIMNS. IN MM

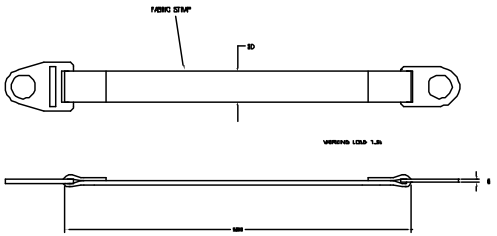

DRAWN fJJ			
DATE 17Dec01			2
DATE 4Dec01			1
	DATE	C.NOTE	ISS

CWA DESIGN COPYRIGHT
NOT TO BE USED OR RE-PRODUCED WITHOUT EXPRESS PERMISSION FROM CWA

TOLERANCES :- UNLESS OTHERWISE STATED
NO DEC PLACE ±0.5 ANGULAR ±½°
1 DEC PLACE ± 0.3 2 DEC PLACE ±0.15
HOLES UP TO 12.7mm +0.10mm -0
ALL COAXIAL DIAS CONCENTRIC WITHIN 0.05mm
ALL HOLES ON PITCH CIRCLES WITHIN D.10mm OF TRUE POS.

CWA PRODUCTS LIMITED HOOK BASINGSTOKE HANTS

MATERIAL

FINISH

DRWG No. 30-3034-20

SURFACE FINISH 0.8 UNLESS OTHERWISE STATED

TITLE LOCKING STRAP